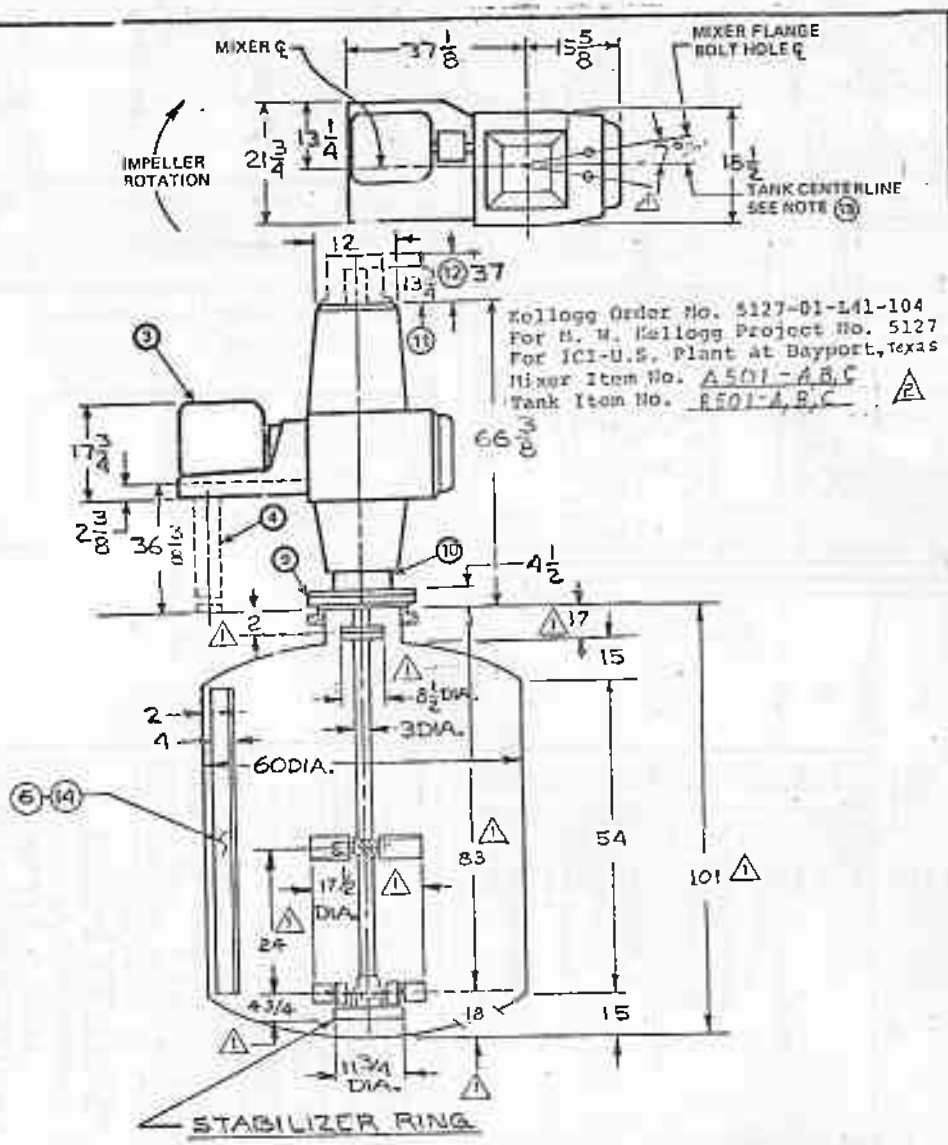

ALL EQUIPMENT DESIGN AND APPLICATION DATA SHOWN HEREIN, AND RELATED KNOW-HOW ARE CONFIDENTIAL AND THE PROPERTY OF MIXING EQUIPMENT COMPANY. NO USE OR DISCLOSURE THEREOF MAY BE MADE WITHOUT OUR WRITTEN PERMISSION.

ALL DIMENSIONS ARE IN INCHES UNLESS OTHERWISE SPECIFIED

(1) MATERIAL OF MIXER PARTS IN THE TANK IS: TITANIUM GR. 7 △

(2) IMPELLER – TYPE A200/R101 △
QUANTITY OF BLADES 4/6
R.P.M. 190
KEYWAY ON SHAFT ALLOWS FOR THE FOLLOWING IMPELLER ADJUSTMENT IN 3" INCREMENTS.
△ IMPELLERS ADJUSTMENT ON A 48" CONTINUOUS KEYWAY...

(3) MOTOR: 25 H.P.
1750 R.P.M. 284T FRAME

(4) OUTBOARD SUPPORTS (AS CHECKED)
☒ NOT FURNISHED BY "LIGHTNIN" – SUPPORT IS NOT REQUIRED IF TANK NOZZLE IS OF SUFFICIENT STRENGTH AND RIGIDITY.
☐ FURNISHED BY "LIGHTNIN". SEE DWG.

(5) MIXER WEIGHT
MAIN DRIVE 1640
MOTOR 355
SHAFT 109
IMPELLER(S) 109
TOTAL (LBS) 2208

(6) BAFFLES – BY OTHERS
QUANTITY 6 SPACED 60°
SIZE AND LOCATION AS SHOWN. (SEE DETAIL)

(7) TANK MUST HAVE MINIMUM OPENING SIZE OF 16DIA. TO PASS DISASSEMBLED MIXER PARTS.

(8) MIXER MOUNTING DESIGN DATA

UNIT SIZE	VERTICAL DOWNWARD LOAD – (LBS)	TORQUE (IN.–LBS)	BENDING MOMENT (IN.–LBS)
84	4,760	20,900	101,000

DESIGN LOADS ARE GREATER THAN ACTUAL LOADS BY A SUITABLE FACTOR, CONSISTENT WITH CONSTRUCTION CODES AND "LIGHTNIN" EXPERIENCE.

MIXING EQUIPMENT COMPANY, INC. does not warrant, guarantee, or assume any responsibility for the design or construction of the mounting structure for the mixer.

(9) MIXER MOUNTING FLANGE 900LB. ANSI (ASA) DRILLING △

ANSI SIZE	O.D.	BOLT CIRCLE	NO. OF HOLES	BOLT DIA.
18	28	24 3/4	24	1 1/4

(10) MECHANICAL SEAL: △ △
PER DWG. M486895 B & M486875 C-1
STYLE "C" CODE T-4
INLET & OUTLET CONNECTIONS TO SEAL LUBRICANT 1/8 NPT ~ COOLANT 1/4 NPT

(11) CLEARANCE REQUIRED FOR SEAL CARTRIDGE REMOVAL

(12) CLEARANCE REQUIRED FOR PULLER ASSEMBLY (OPTIONAL)

(13) AS COMMON PRACTICE, FLANGE BOLT HOLES ARE SHOWN STRADDLING TANK CENTERLINE

(14) TOP VIEW BAFFLE DETAIL

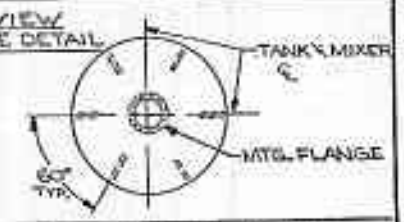

(15) UNIT IS SUPPLIED WITH A TYPE 2 DEAD END LUBRICATOR

REV.	DATE	BY	CHANGES
△	8-29-75	J.R.C.	AS SHOWN
△	10-6-75	[illegible]	REVISED AS NOTED
△	[illegible]	[illegible]	AS SHOWN
△			

CERTIFIED BY: C. DELOE DATE 8-29-75
FOR: KELLOGG

AGITATOR MODEL B4525
TAG NO.
P.O. NO. 5127-01-141-104 PROJ. #5127 △
REF. DWG.

MIXING EQUIPMENT CO., INC.
A UNIT OF GENERAL SIGNAL

Members of the LIGHTNIN group are located in Rochester, N.Y., U.S.A., Toronto, Canada, Mexico, D.F., Poynton, England, Framerles, Belgium, Paris, France, Frankfurt, Germany; Solna, Sweden; Sydney, Australia

LIGHTNIN®
INSTALLATION DRAWING

© 1975

DRAWN	CKD	DWG. NO.	REV.
M.J.	T.L.	M486895A	△ 3
DATE 5-22-75	DATE 5-22-75		

B-2180B